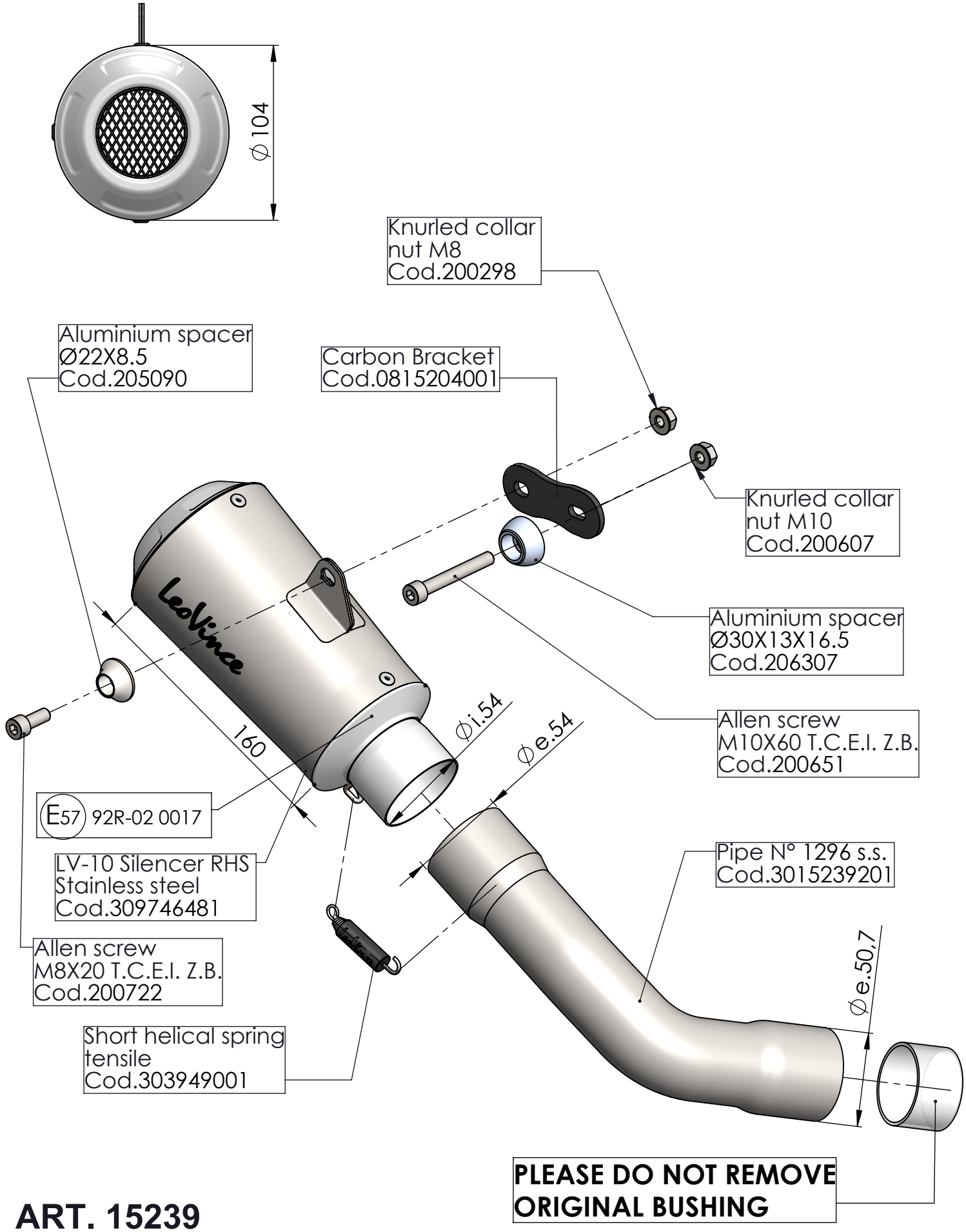

ART. 15239

KAWASAKI Z900

SLIP-ON - LV-1O - STAINLESS STEEL - APPROVED